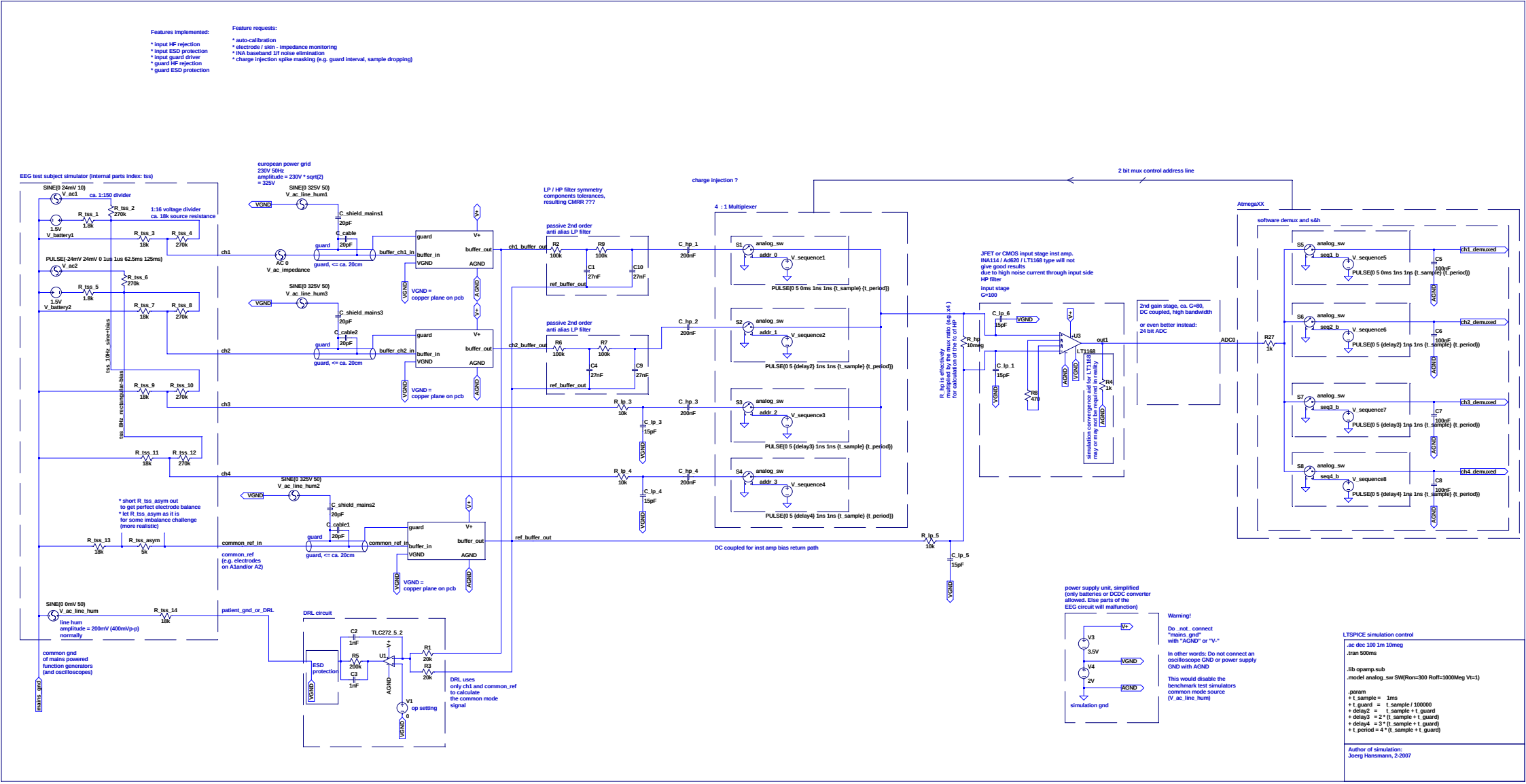

--- D:_SPICE\SwCAD III work\work_EEG__OLIMEX, primary muxed, 21 ch EEG\EEG_input_mux_09.asc ---